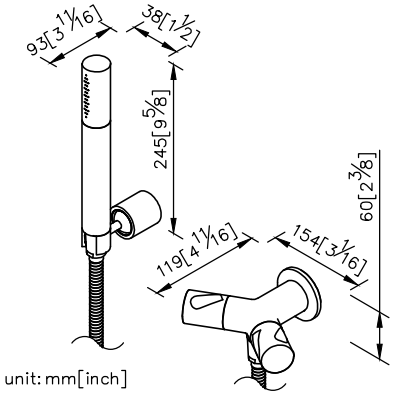
93[3 11/16]
38[1 1/2]
245[9 5/8]
60[2 3/8]
119[4 11/16]
154[3 1/16]
unit: mm[inch]

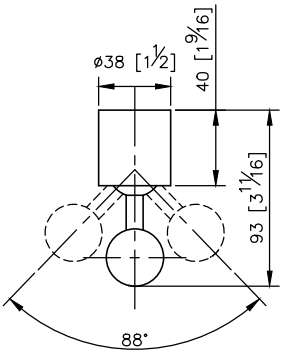
ø38 [1 1/2]
40 [1 9/16]
93 [3 11/16]
88°

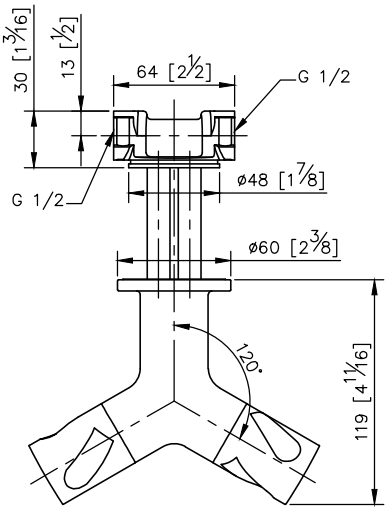
30 [1 3/16]
13 [1/2]
64 [2 1/2]
G 1/2
G 1/2
ø48 [1 7/8]
ø60 [2 3/8]
120°
119 [4 11/16]

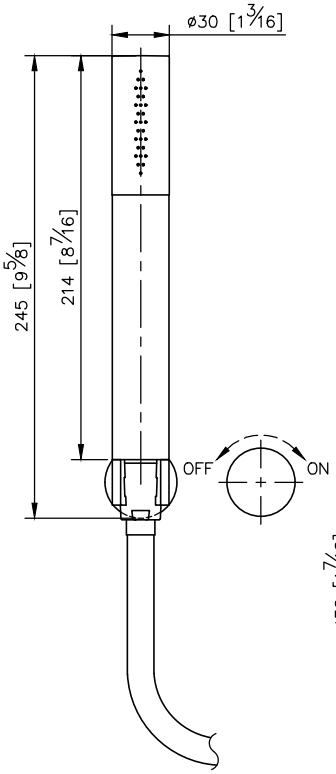
ø30 [1 3/16]
245 [9 5/8]
214 [8 7/16]
OFF
ON

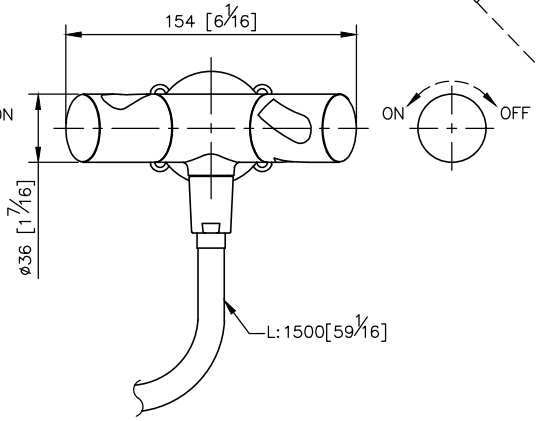
154 [6 1/16]
ON
OFF
ø36 [1 7/16]
L: 1500[59 1/16]

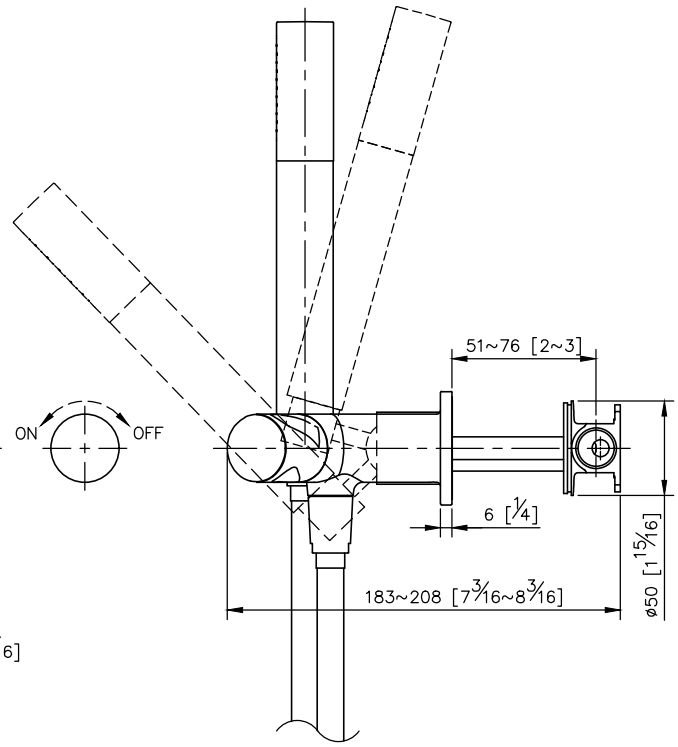
51~76 [2~3]
6 [1/4]
183~208 [7 3/16~8 3/16]
ø50 [1 15/16]