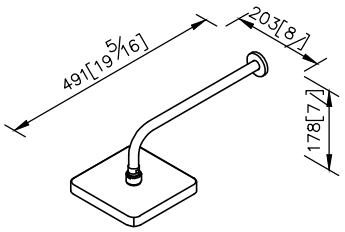

Showerhead

6909-AB-80CP

1.Rain shower angle could be adjusted by pivot joint.
2.Removable water-saving flow restrictor of rain shower could be removed by request.
3.Thread of body connector: 1/2-14 NPT.
4.Brass with Chrome plated finish meets ASTM-SC2 standard.
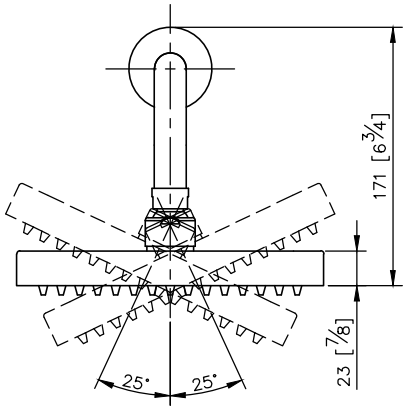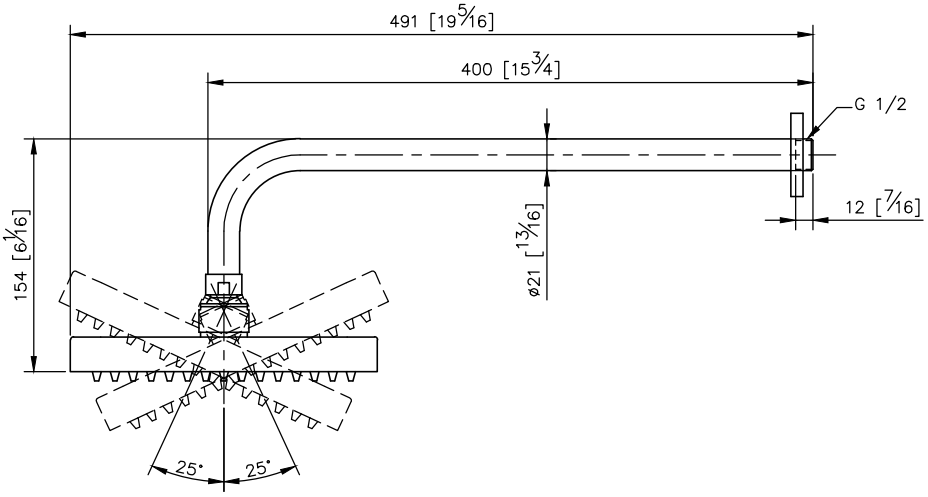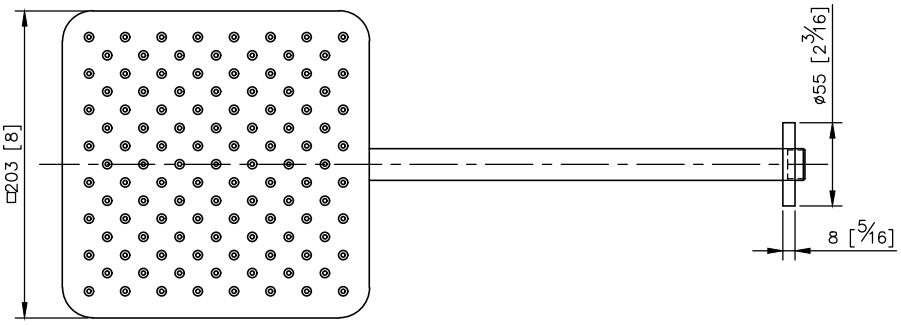
unit: mm[inch]